3591414-02 - Downloaded from www.volvopenta.com 29/09/2015 17:38:34

1-46957-00	E3	W. 6'	P/A 0 2 0- main	RELEASED

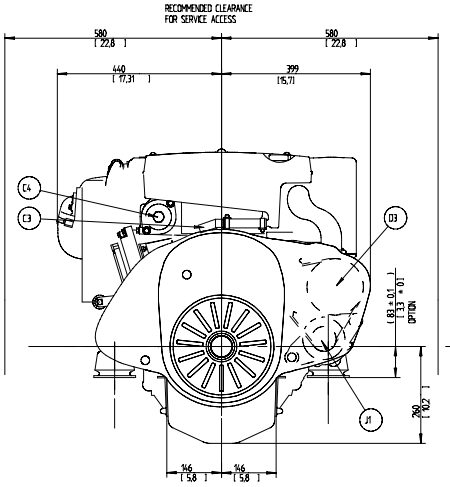

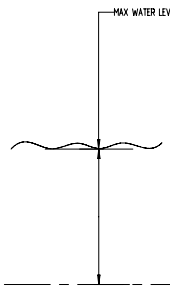

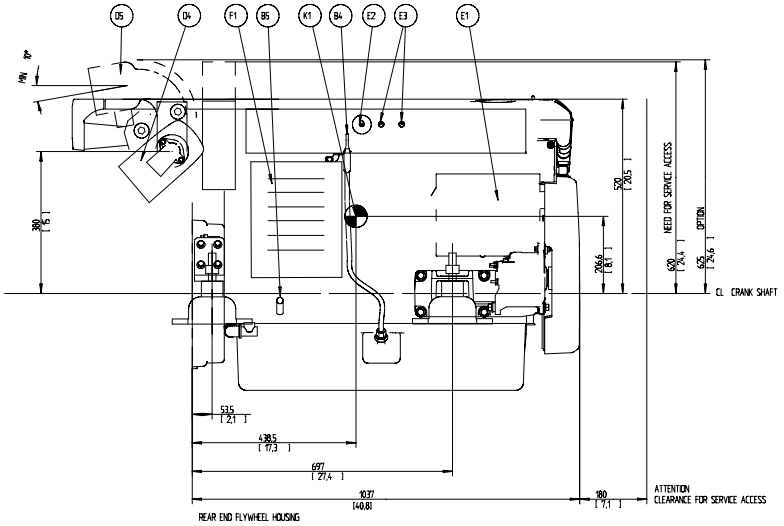

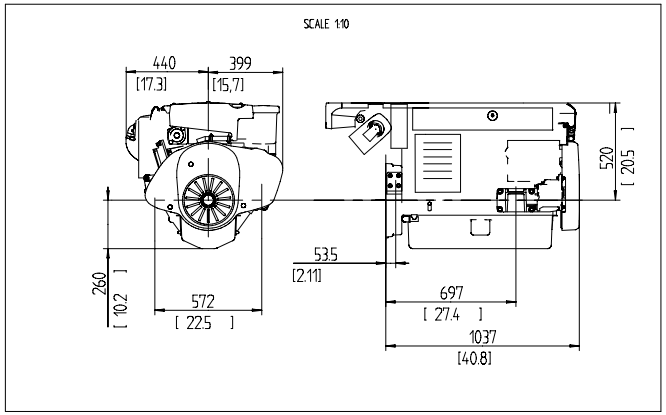

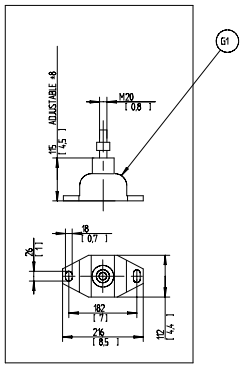

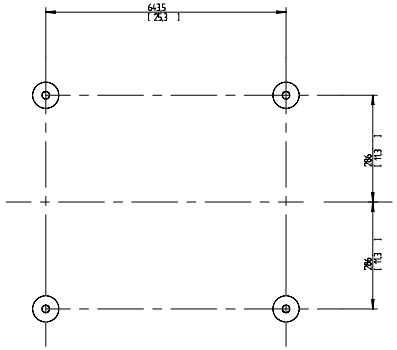

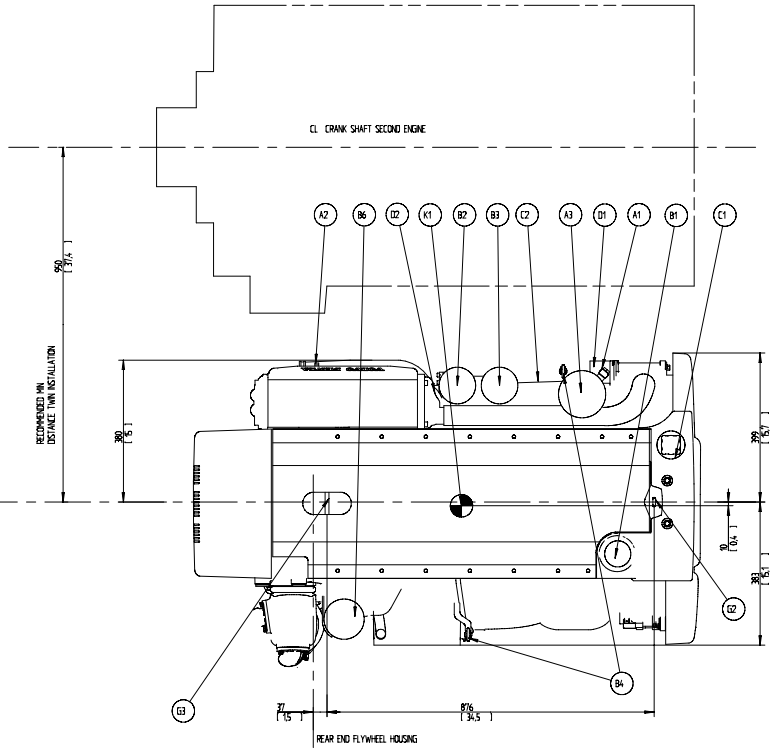

A1	FUEL CONNECTION INLET. 10mm I.D. HOSE
A2	FUEL CONNECTION OUTLET. 10mm I.D. HOSE
A3	FUEL FILTER/WATER SEPARATOR
B1	OIL FILLER ENGINE
B2	OIL FILTER, MAIN
B3	OIL FILTER, BYPASS
B4	OIL DIPSTICK ENGINE PORT STANDARD, CAN BE MOVED TO STARBOARD
B5	OUTLET FOR OIL BILGE PUMP. 12mm/1/2" I.D. HOSE.
B6	CRANK CASE VENTILATION FILTER
C1	FRESH WATER FILLER
C2	FRESH WATER DRAIN POINT
C3	CONNECTION HOT WATER INLET R 1/2" (OPTION)
C4	CONNECTION HOT WATER OUTLET R 1/2" (OPTION)
D1	SEA WATER INLET FOR Ø50 /2" I.D. HOSE.
D2	SEA WATER DRAIN POINT (2x)
D3	SEA WATER PUMP
D4	WET EXHAUST CONNECTION. 127 mm / 5" I.D. HOSE
D5	EXHAUST RISER (OPTION)
E1	ECU CONTROL UNIT
E2	ENGINE STOP
E3	AUTOFUSES ONLY 24V
F1	AIR FILTER
G1	ELASTIC SUSPENSION (4x). (OPTION)
G2	LIFTING EYE, FRONT, Ø40
G3	LIFTING EYE, REAR, Ø30
J1	POWER STEERING PUMP ALT. EXTRA ALTERNATOR (OPTION)
K1	CENTRE OF GRAVITY

ALL EQUIPMENT ON THE DRAWING IS NOT STANDARD

FOR WEIGHTS AND VOLYMES PLEASE REFER TO TECHNICAL DATA SALES GUIDE

SCALE 1:5

SYMBOLS, DESIGNATIONS AND GENERAL DRAWING METHODS STD 97-0001 AND STD 97-0002

Drawn by: ENGINE DIMENSIONS D6-435 BT

Drawing Type: DIMENSION DRAWING

VOLVO PENTA

Drawing No: 3591414 | Sheet No: 02 | Sheet No: 1(1)